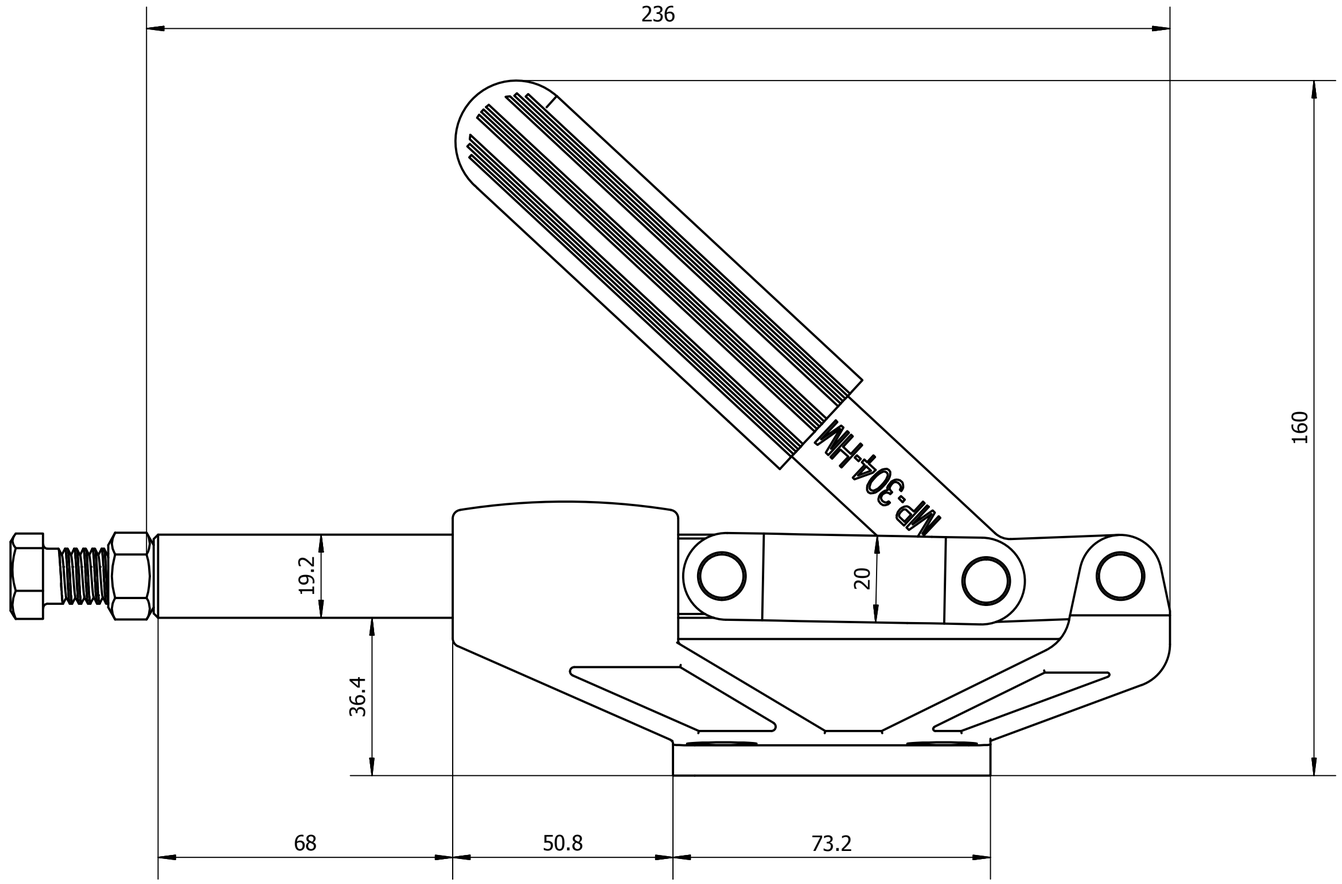
236
160
19.2
20
36.4
68
50.8
73.2
MP-304-HM

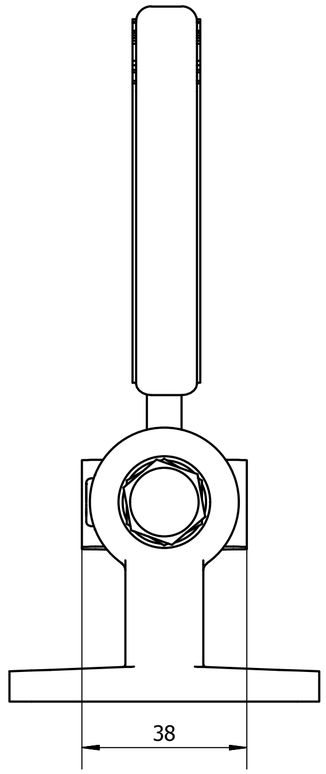
38

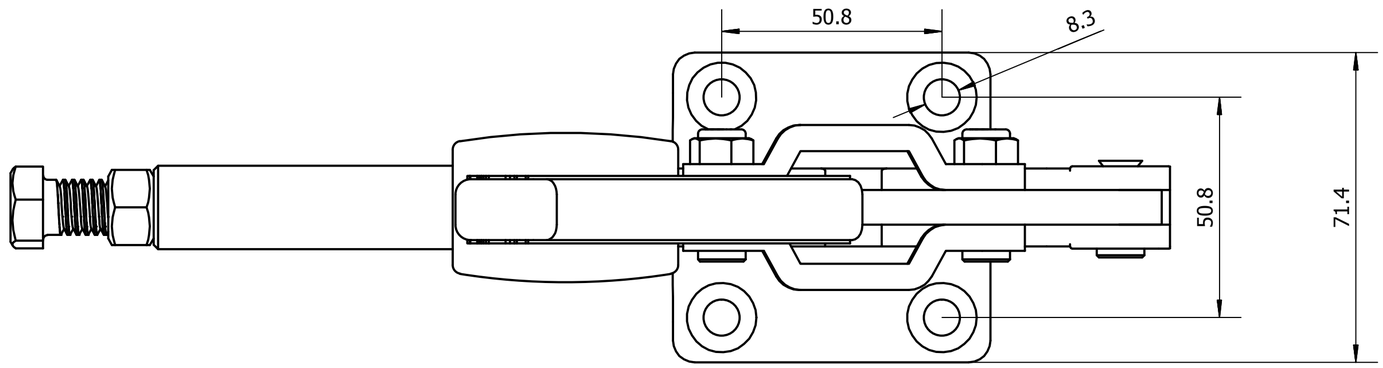
50.8
8.3
50.8
71.4

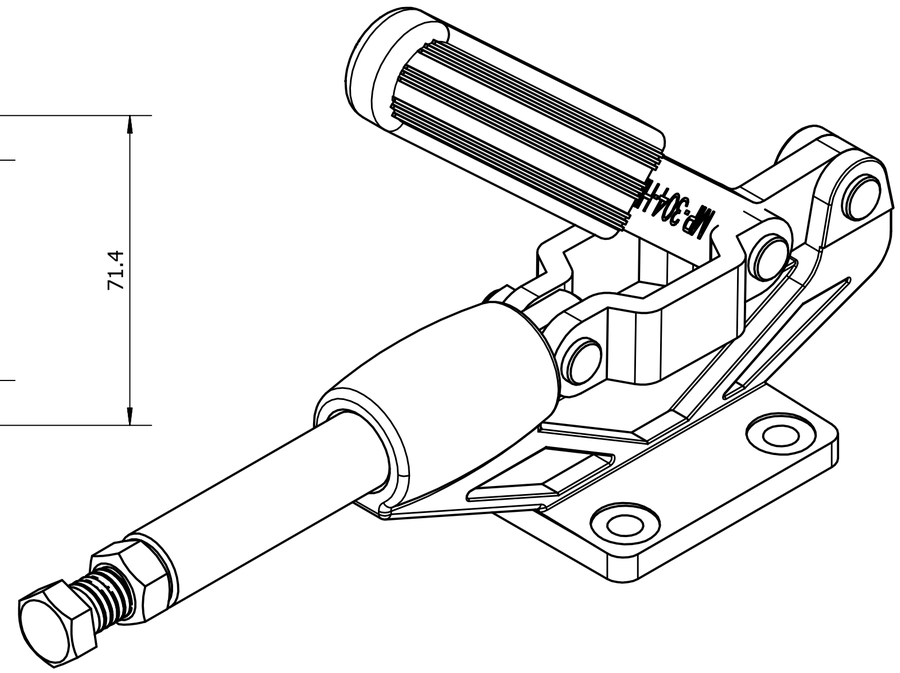
MP-304-HM